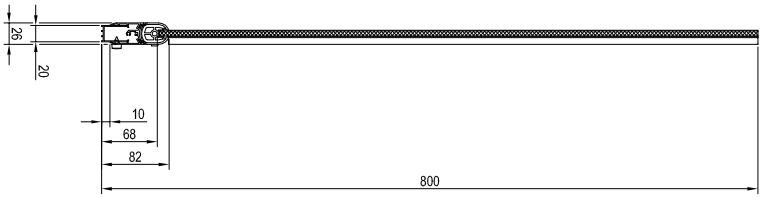
26
20
10
68
82
800

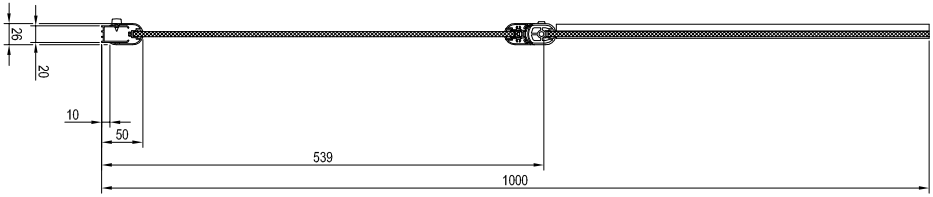
26
20
10
50
539
1000

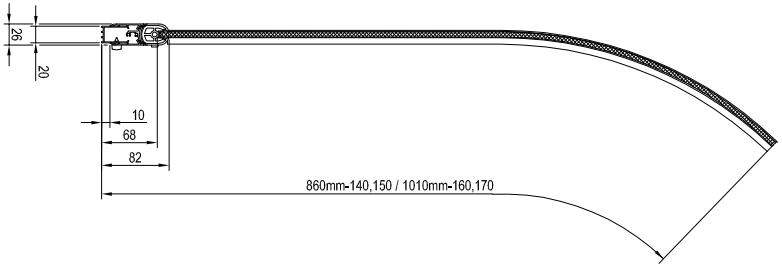
26
20
10
68
82
860mm-140,150 / 1010mm-160,170

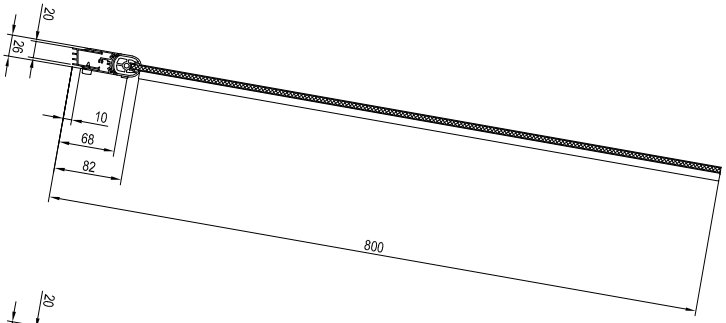
20
26
10
68
82
800

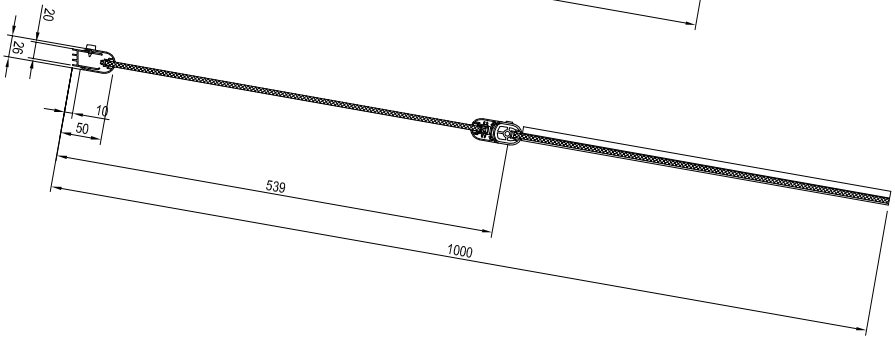
20
26
10
50
539
1000