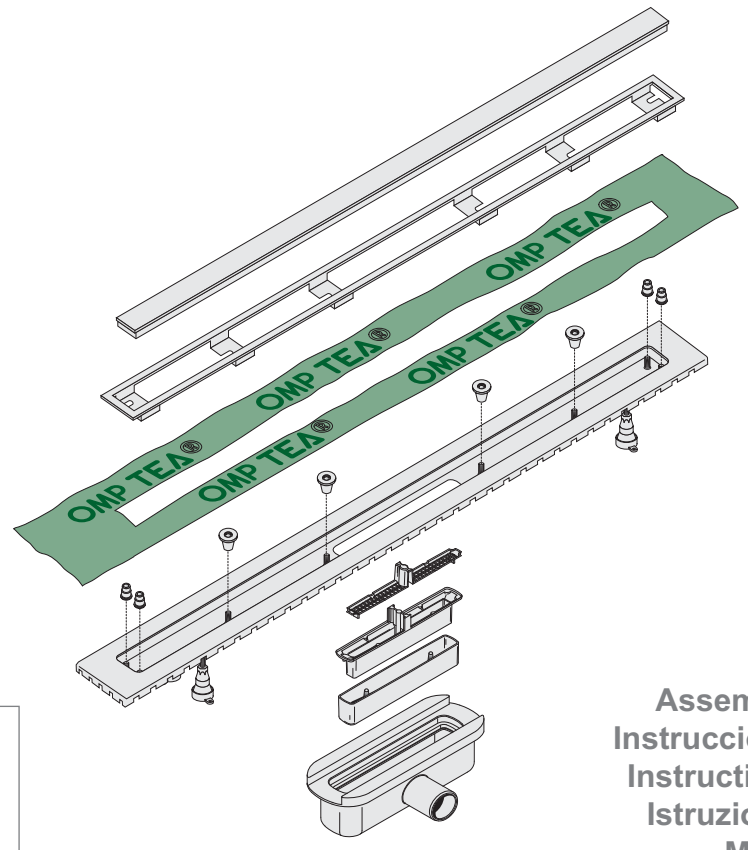

6973
ESSEFLOW

Assembly instructions
Instrucciones de montaje
Instructions de montage
Istruzioni di montaggio
Montageanleitung
Montageaanwijzing
Monteringsanvisning
Montážní návod

Date

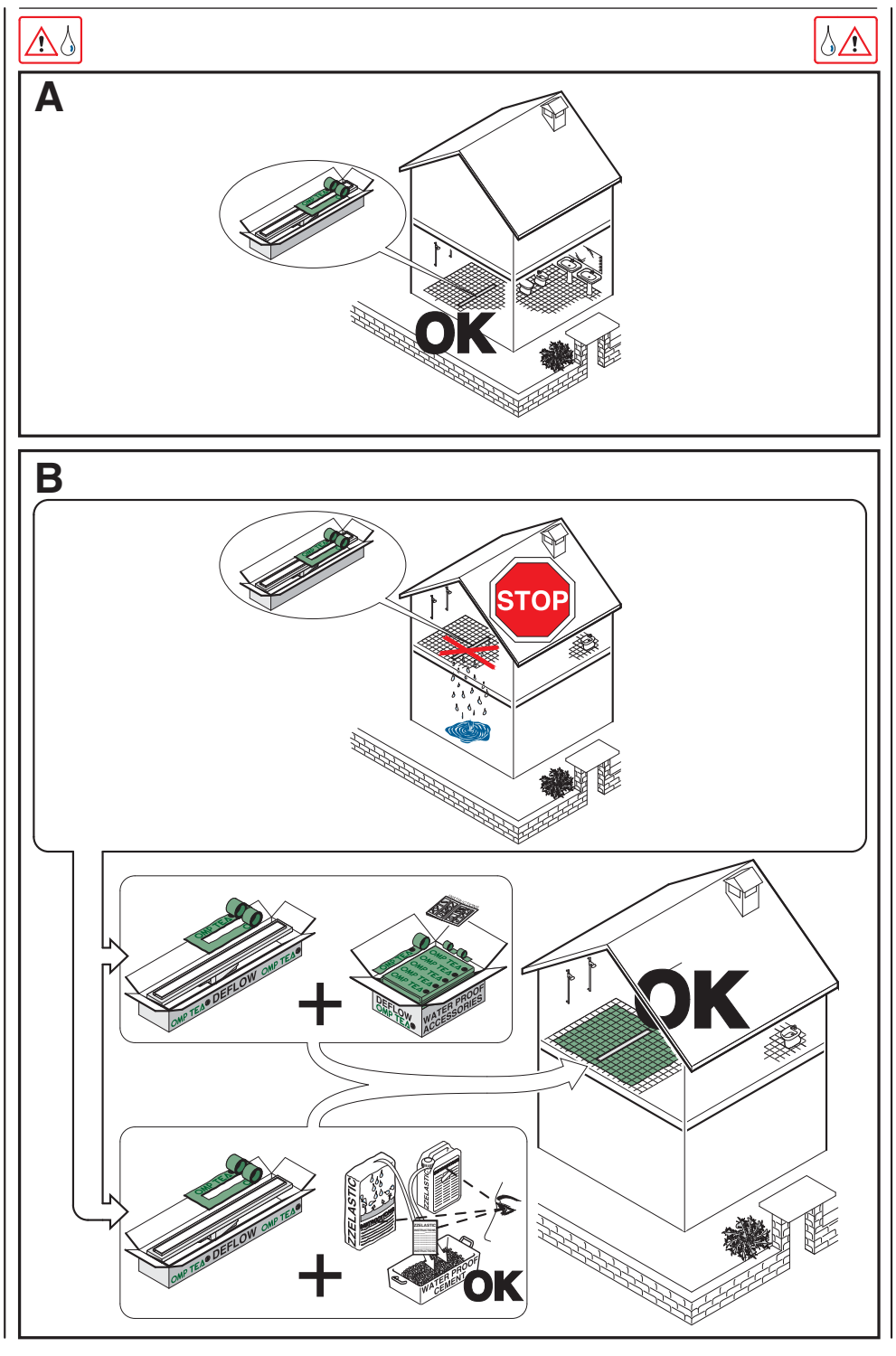

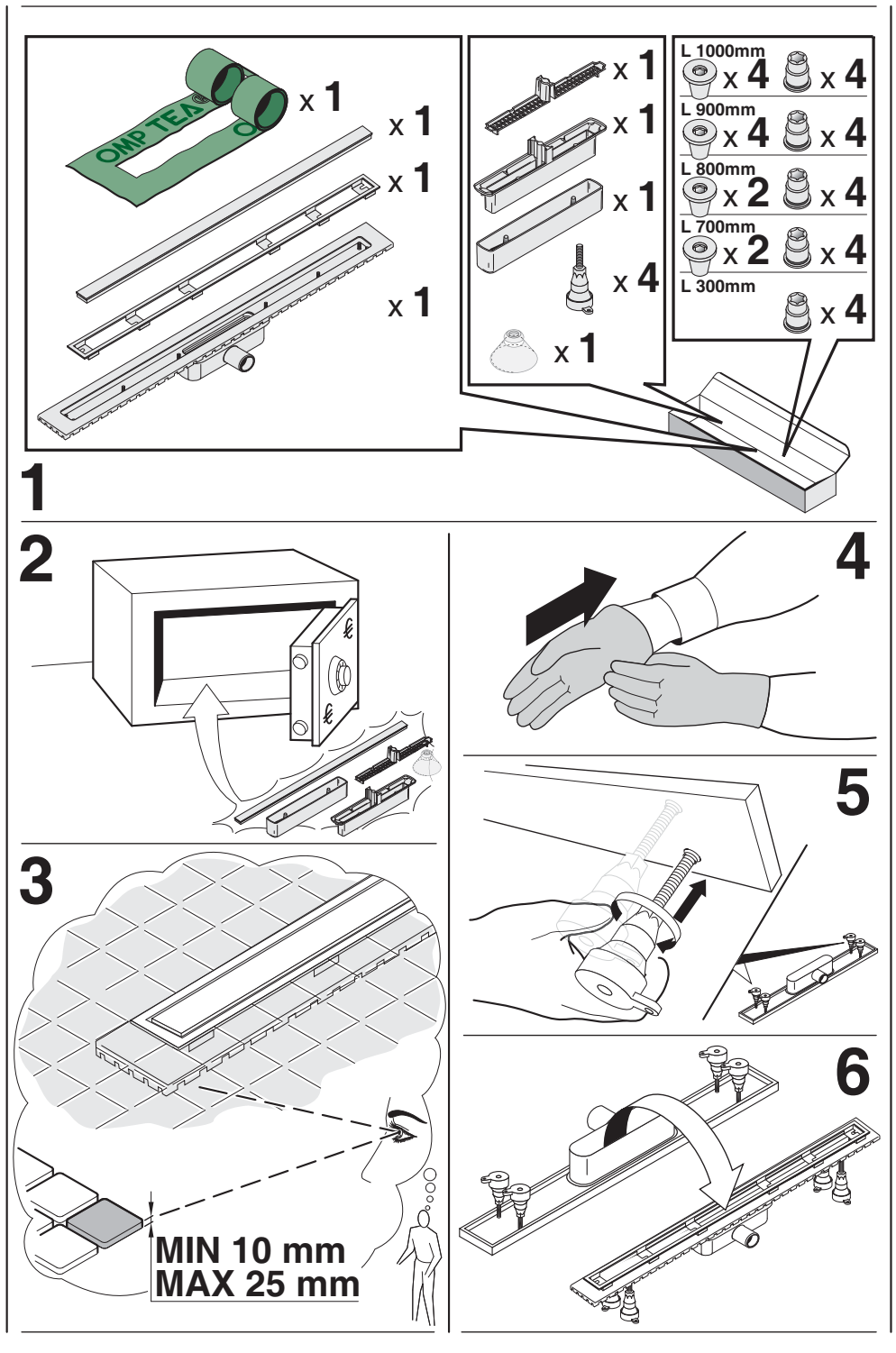

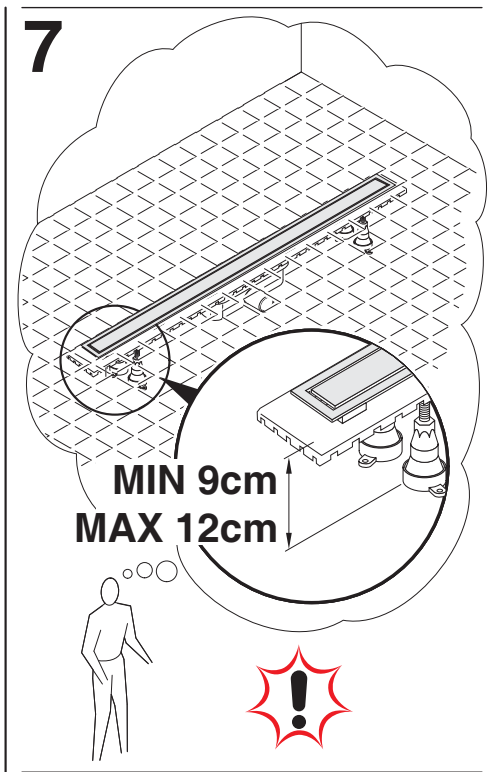
7
MIN 9cm
MAX 12cm

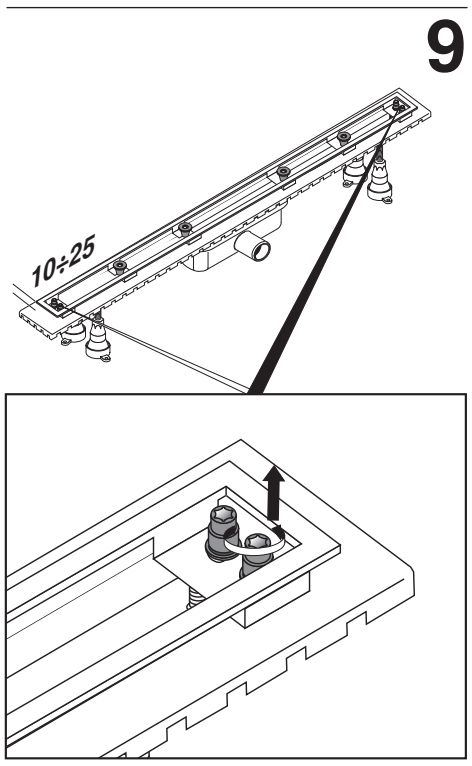
9
10÷25

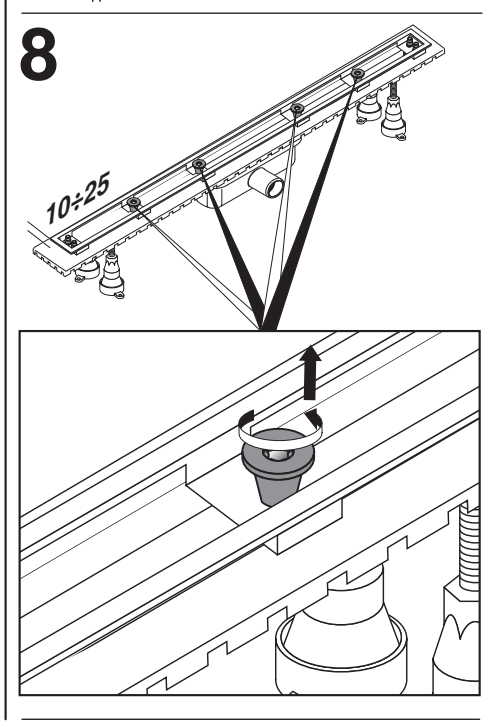
8
10÷25

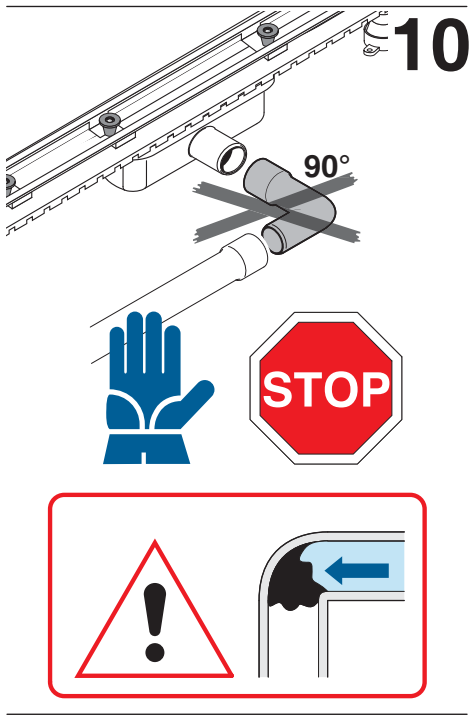
10
90°
STOP

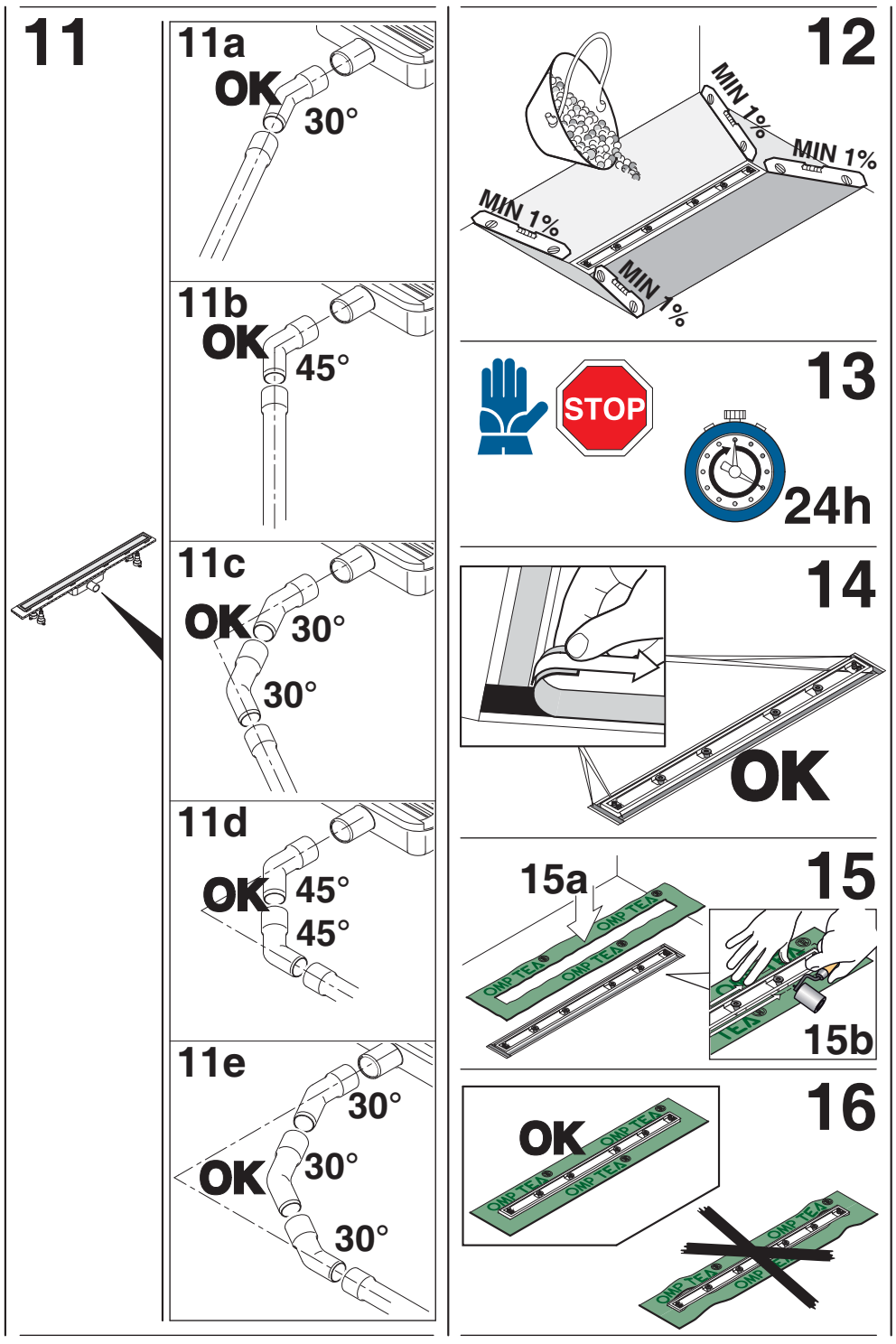
11
11a
OK
30°
11b
OK
45°
11c
OK
30°
30°
11d
OK
45°
45°
11e
OK
30°
30°
30°
12
MIN 1%
MIN 1%
MIN 1%
MIN 1%
13
STOP
24h
14
OK
15
15a
15b
16
OK

17
18
STOP
19 Waterproofing
OK
DEFLOW
WATER PROOF ACCESSORIES
OK
20
1
2
3

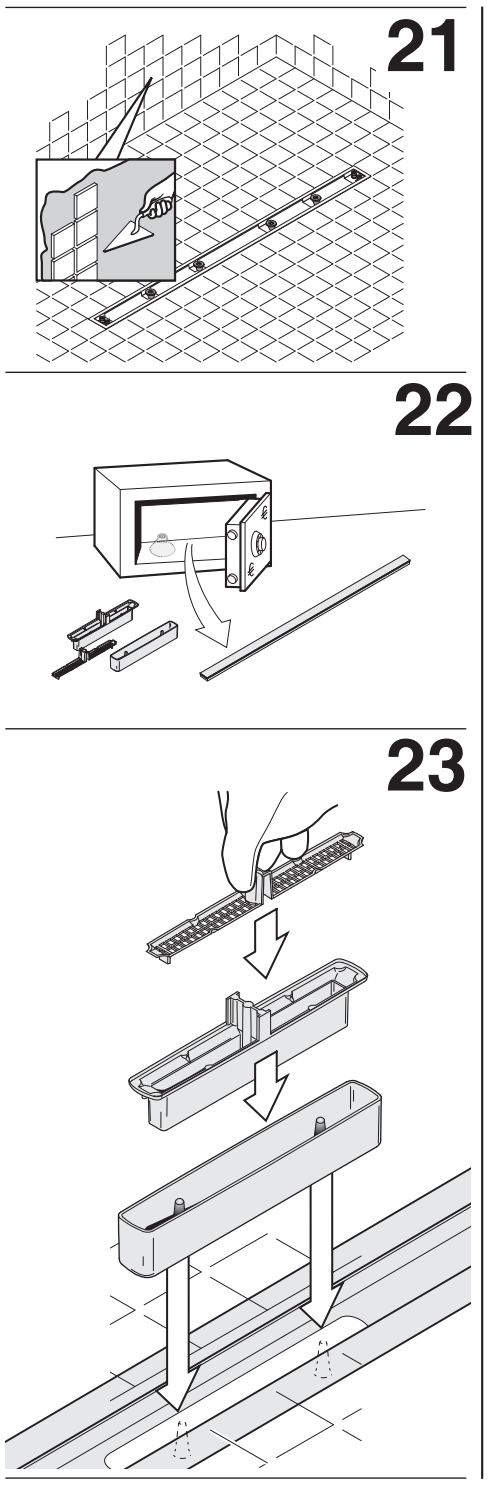
21
22
23

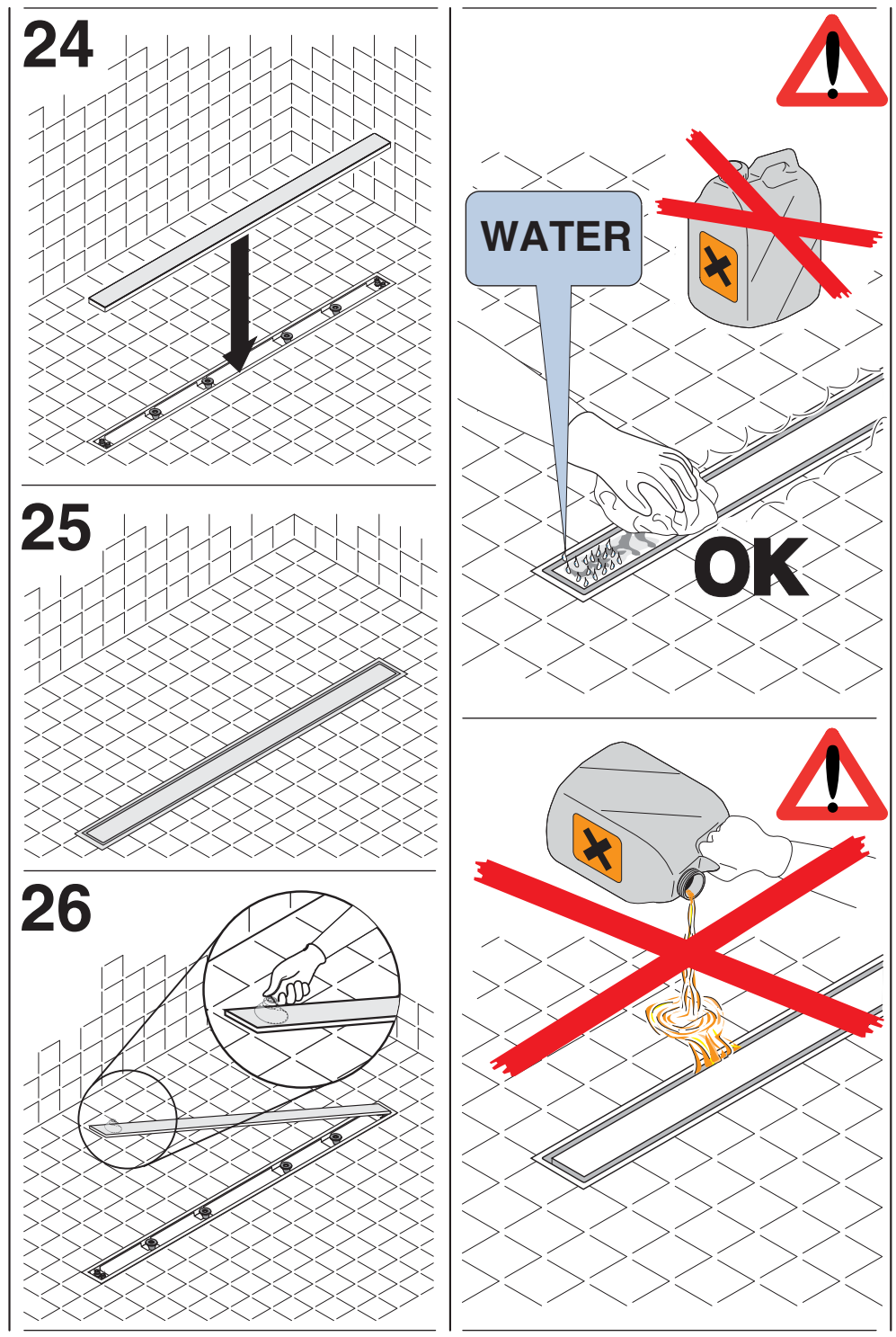
24
25
26
WATER
OK