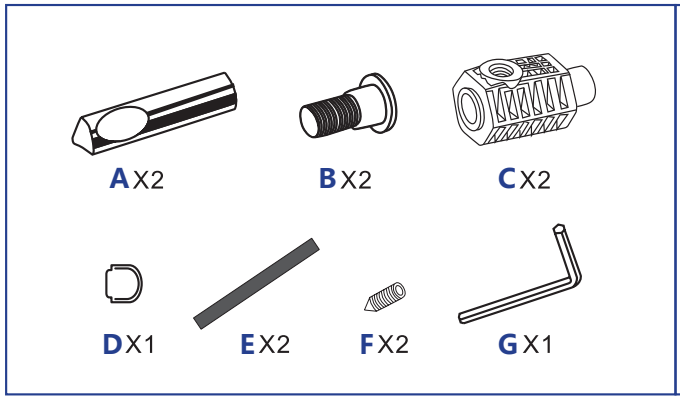
A X2
B X2
C X2
D X1
E X2
F X2
G X1

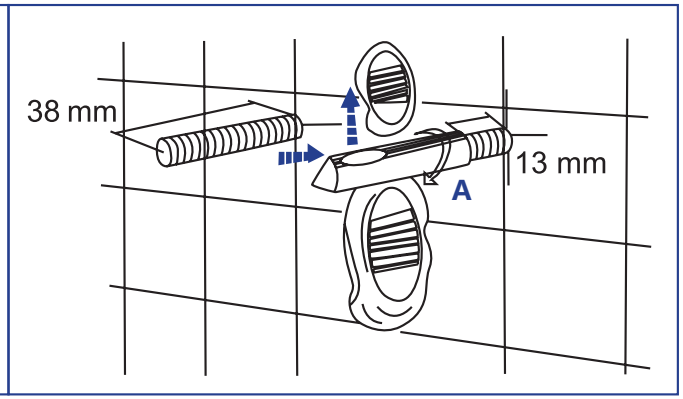
38 mm
13 mm
A

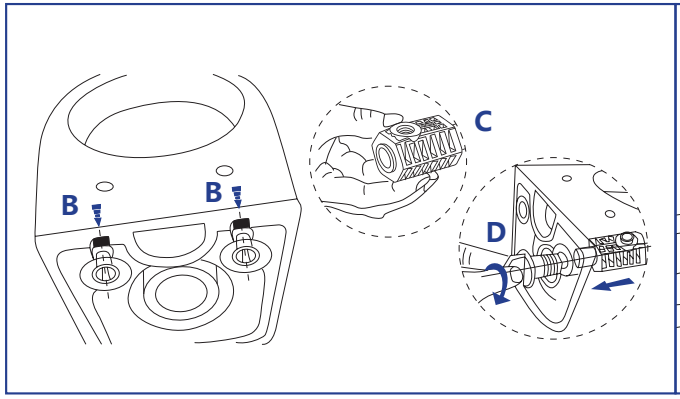
B
B
C
D

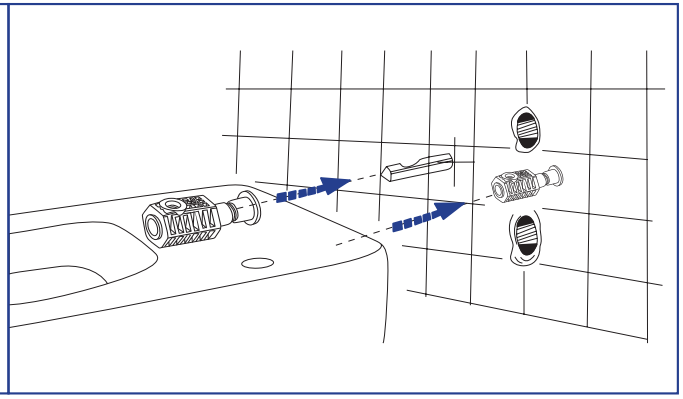

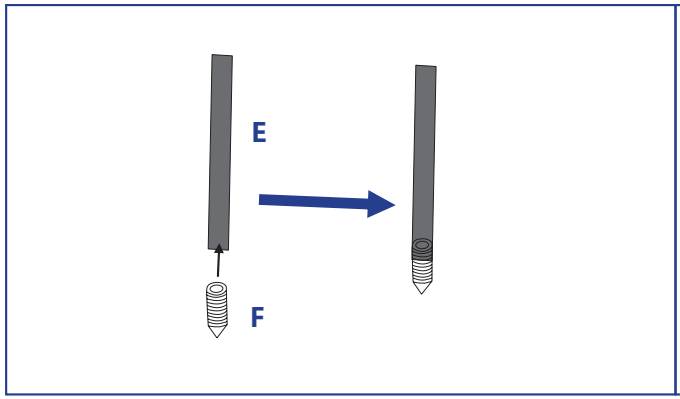
E
F

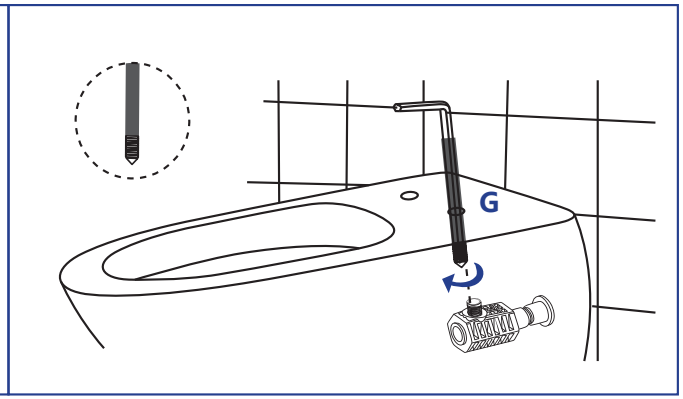
G